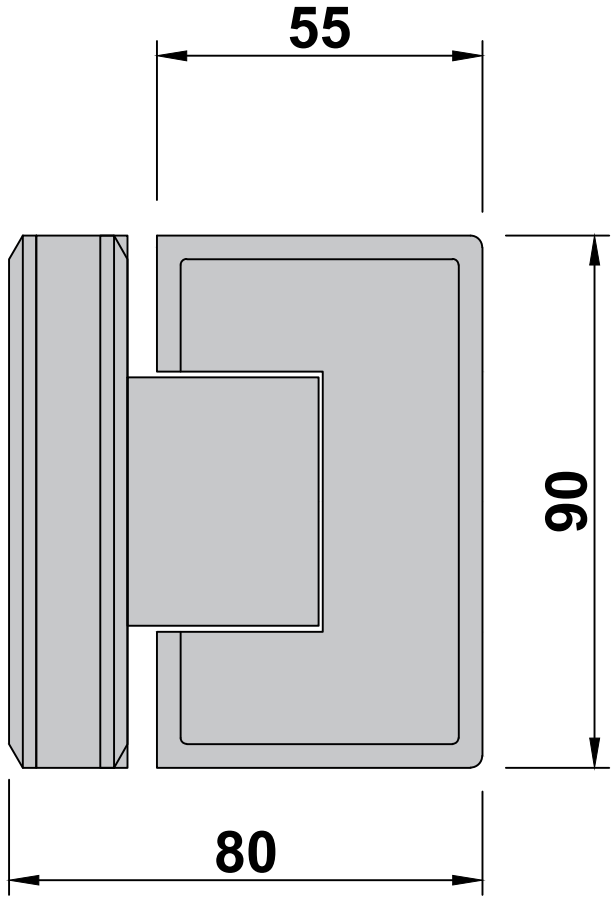

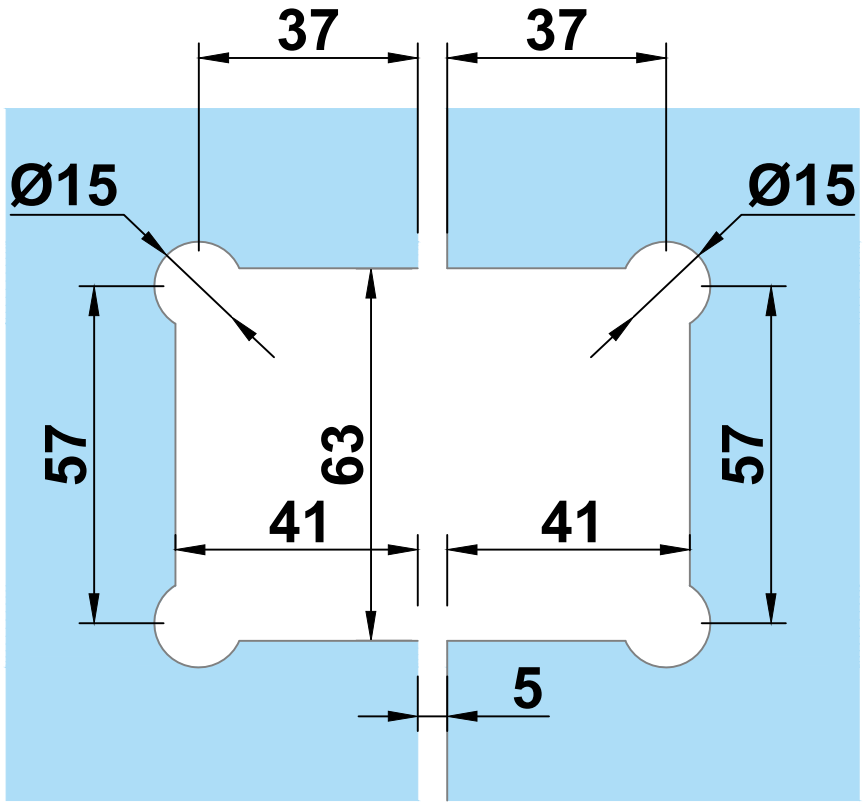

art-102-90